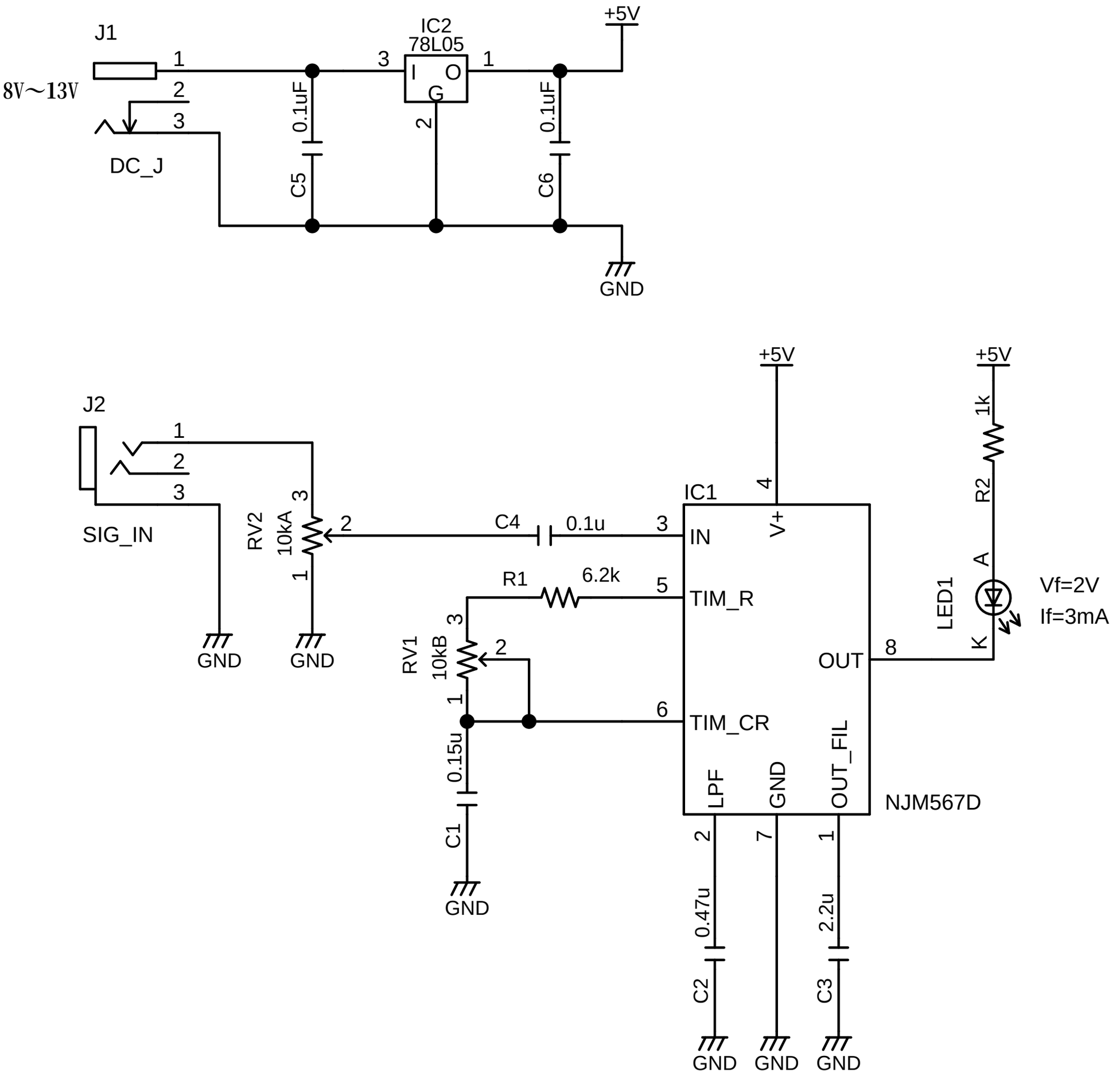
J1
8V～13V
DC_J
IC2
78L05
I
O
G
+5V
0.1uF
C5
C6
GND
J2
SIG_IN
RV2
10kA
C4
0.1u
IC1
IN
V+
TIM_R
TIM_CR
OUT
LPF
GND
OUT_FIL
NJM567D
R1
6.2k
RV1
10kB
0.15u
C1
0.47u
C2
2.2u
C3
1k
R2
LED1
A
K
Vf=2V
If=3mA