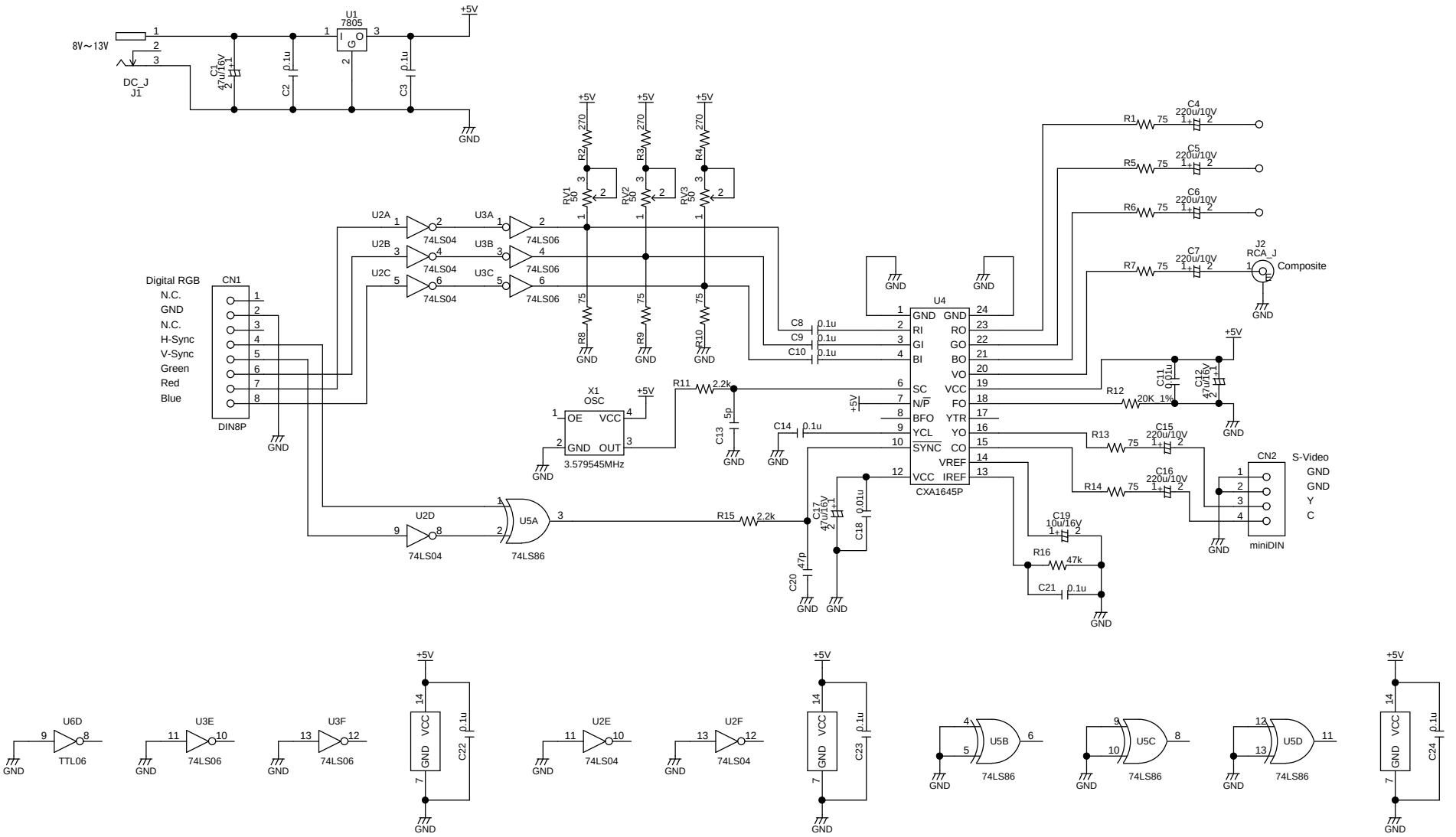
8V~13V
DC_J
J1
C1
47u/16V
C2
0.1u
U1
7805
C3
0.1u
+5V
GND
U2A
U2B
U2C
U2D
74LS04
U3A
U3B
U3C
74LS06
U5A
74LS86
Digital RGB
N.C.
GND
N.C.
H-Sync
V-Sync
Green
Red
Blue
CN1
DIN8P
R2
R3
R4
270
RV1
RV2
RV3
50
R8
R9
R10
75
X1
OSC
OE
VCC
GND
OUT
3.579545MHz
R11
2.2k
C13
5p
C14
0.1u
R15
2.2k
C17
47u/16V
C18
0.01u
C20
47p
C8
C9
C10
U4
GND
RI
GI
BI
SC
N/P
BFO
YCL
SYNC
VCC
RO
GO
BO
VO
FO
YTR
YO
CO
VREF
IREF
CXA1645P
R12
20K 1%
C11
0.01u
C12
47u/16V
R13
R14
C15
C16
220u/10V
C19
10u/16V
R16
47k
C21
0.1u
R1
R5
R6
R7
75
C4
C5
C6
C7
J2
RCA_J
Composite
CN2
S-Video
GND
GND
Y
C
miniDIN
U6D
TTL06
U3E
U3F
C22
U2E
U2F
C23
U5B
U5C
U5D
C24